A Graph Approach to Observability in Physical Sparse Linear Systems

Santiago Vazquez-Rodriguez[1,2,⋆], Jesús Á. Gomollón[2]
Richard J. Duro[1,2] and Fernando López Peña[1,2]

[1]Grupo Integrado de Ingeniería

[2]Universidade da Coruña, c/Mendizábal s/n, 15403 - Ferrol, Spain

[⋆]svr@udc.es

May 10, 2012

Abstract

A sparse linear system constitutes a valid model for a broad range of physical systems, such as electric power networks, industrial processes, control systems or traffic models. The physical magnitudes in those systems may be directly measured by means of sensor networks that, in conjunction with data obtained from contextual and boundary constraints, allow the estimation of the state of the systems. The term observability refers to the capability of estimating the state variables of a system based on the available information. In the case of linear systems, different graphical approaches were developed to address this issue. In this paper a new unified graph based technique is proposed in order to determine the observability of a sparse linear physical system or, at least, a system that can be linearized after a first order derivative, using a given sensor set. A network associated to a linear equation system is introduced, which allows addressing and solving three related problems: the characterization of those cases for which algebraic and topological observability analysis return contradictory results; the characterization of a necessary and sufficient condition for topological observability; the determination of the maximum observable subsystem in case of unobservability. Two examples illustrates the developed techniques.

1 Introduction

The *state variables* that characterize a *physical system* are estimated by means of the data available at any given time. This data can be generated from a sensor network spread out over an area or from contextual and boundary constraints. In general, the known system variables are said to be *sensed* or *measured variables* whether they are sensed with a real device or their magnitudes are obtained in a sort of *virtual sensors*. The remaining variables are considered *not sensed* or *unmeasured variables*. In such a context, the *observability* issue arises when we would like to know if the sensing system is enough to be able to determine the state of the system, that is, the system state variables.

This paper deals with a scenario where a well known model describes the behavior of a physical system in terms of relationships between system variables and parameters. The system must be linear or linearized after a first order derivative. In this context, a given sensing network is considered and the system observability analysis is addressed.

The term *observability* was introduced in the realm of linear dynamical control systems [1]. It stems from the capability of estimating the state of a system based on the information available. Although observability is essentially a numerical and algebraic problem, some techniques based on topology and graph theory have been developed to provide solutions in this area.

Due to the fact that observability and the problems related to it were studied in different engineering disciplines, the technical terminology is not totally uniform. As a result, some terms are more widely used in some areas and not in others and, in a few cases, different terms describe the same thing in different fields.

Five examples are described below pursuing the following aims: on one hand, illustrating how observability and other related problems constitute research topics in different physical, engineering and industrial areas, where a sensor network is designed in order to analyze a given system; on the other hand, showing the multiple points of view from which these issues can be addressed and, in particular, how topological and graph based approaches were developed in some cases.

The term sensor network comprises a broad spectrum of engineering and physical systems and, in particular, the topic of wireless sensor networks has led to issues that, in one way or another, are related to observability. This is the case of *coverage*, optimal node *placement* and the minimum number of nodes required to achieve *connectivity*. In [2] it is shown that a graph model can be used to describe those systems and some graph approaches have been

developed in order to provide an answer to the challenges posed.

Whithin the sphere of linear control systems, the *controllability* problem was addressed from a graph-theoretic approach. A graph associated to a system was defined in [3] and conclusions related to several system properties are derived from the analysis of such a graph. A survey of the techniques proposed in the literature for structured linear systems can be found in [4]. More recently, a graph approach to observability analysis is proposed in [5, 6].

High voltage electric power networks constitute another field where observability has been an important issue in system analysis for decades [7, 8]. It is worth mentioning the approach to the problem in [9] where the authors characterize what they call *topological observability* through the existence of certain graphs that, defined in the electrical network, obey constraints derived from the sensing network. However, these graph techniques do not allow the inclusion of measurements that are currently being considered, such as current and phasor measures.

Observability has also been a motivation for research in traffic models in topics related to the origin/destination trip matrix estimation challenge. This is the case of [10], where the authors adapt topological techniques developed for electric power networks to this new context. Although this issue is more complex than the description made by the authors in their article, it has been taken as an example to illustrate the techniques proposed in the present work as will be shown in a later section.

Material and energy balances that must take place in industrial processes are analyzed in [11]. There, its authors distinguish up to four categories of balancing equations, depending on whether they consider or not materials, chemical reactions, energy and entropy. They study the *solvability* of the resulting equations, for which a set of sensed variables is taken into account. The observability and redundancy of measurements, as well as the errors in the measured values are included in the dissertation. Statistical techniques are used to estimate the state of the system by *reconciliation*. In the case of linear systems, a parallelism is established between system and sensing observability conditions and the existence of certain graphs defined from the process balancing flowsheet.

The common topic of the aforementioned scenarios, with regards to graph theory, is that certain graph techniques were developed in all the cases because of the existence of graphs or networks that characterized the systems with a given sensor set. Furthermore, the equations that describe the networks are linear or linearized. In this paper a new graph technique is presented in order to characterize the observability of any linear physical system. The implementation of such a technique imposes constraints on the problem, summarized by the fact that the systems must be sparse and of large dimen-

sion. For any sparse and large dimensional physical system, an associated network will be defined based, exclusively, on structural considerations, that is, on the topology of the equation system in its matrix form that relates the sensed variables with the state variables. It will be demonstrated that the system can be said to be topologically observable if there exists a certain graph within the associated network.

Krumpholz et al. developed in [9] a topological approach for the observability issue in the scope of electric power systems. Nevertheless, the problem related to the characterization of those cases for which algebraic and structural techniques return contradictory results is not studied. In this paper the latter problem is solved, which has allowed carrying out a more general demonstration of the necessary and sufficient condition for topological observability than the one proposed by Krumpholz. Numerous techniques have been developed and widely and successfully tested for decades [12, 13, 14, 15] in the scope of topological observability analysis in electric power systems. In this paper a new graph approach is presented, which allows addressing the observability of any linear physical system or, at least, a system linearized after a first order derivative, and not exclusively electric power systems. Boukhobza et al. had already developed a graph-theoretic technique in order to determine the state and input observability in structured linear systems [5]. Unlike that proposal, the approach presented in this paper makes it possible to exploit techniques like those mentioned above [12, 13, 14, 15], to characterize concepts like parametric unobservability and to easily determine the maximum observable subsystem.

The rest of the paper is organized as follows. Starting from a mathematical model, some terms will be introduced concerning observability and sparse physical systems in the next section. Section 3 is devoted to the bases of graph theory and the concepts used throughout the paper. Once the theoretical assumptions have been described, an analogy between linear equation systems and graph theory is established by means of a network associated to the physical system and a given sensor set. Section 5 introduces the concept of topological observability, which is characterized through the existence of a constrained graph in the associated network. The following section is devoted to the cases where the system is not observable and how the search for the maximum observable subsystem is addressed by means of the same graph techniques. Section 7 includes two examples in order to illustrate the techniques proposed in this paper and how they can be implemented in absolutely different real engineering scenarios. Finally, some conclusions are presented in section 8.

2 Mathematical Model

In order to determine the state of a system, S, consider a set of m variables ω that are sensed. These variables can be expressed in terms of the n system state variables, φ:

$$\omega = \mathbf{h}(\varphi) + \varepsilon \tag{1}$$

where ε represents a vector of errors due to the measurement acquisition process. In what follows this error vector will be ignored because of its irrelevance regarding observability issues. Two different cases might be considered at this point, depending on the linearity of the above equations. On one hand, assume those equations are linear. Then, S is a *linear system* and a matrix formulation can be proposed instead of (1):

$$\omega = \mathbf{H}\varphi \tag{2}$$

where $\mathbf{H}$ is a $m \times n$ characterization matrix of the system. On the other hand, consider that S is a *nonlinear system* that can be linearized around a certain state φ_0 and let $\mathbf{J}(\varphi_0)$ be the $m \times n$ jacobian matrix, thus:

$$\Delta\omega = \mathbf{J}(\varphi_0)\Delta\varphi \tag{3}$$

where $\Delta\omega = \omega - \mathbf{h}(\varphi_0)$ and $\Delta\varphi = \varphi - \varphi_0$. Summarizing, both cases resemble an equation system of the form:

$$\underset{m\times 1}{\mathbf{z}} \quad = \quad \underset{m\times n}{\mathbf{M}} \quad \cdot \quad \underset{n\times 1}{\mathbf{x}} \tag{4}$$

where $\mathbf{z}$ is a constant term vector that results from the m magnitudes sensed throughout the system, $\mathbf{x}$ is the unknown vector that is directly related to the n state variables and $\mathbf{M}$ is a coefficient matrix. In what follows, and in order to simplify the explanation, we will refer to $\mathbf{z}$ and $\mathbf{x}$ as the measurement and state variable column vectors, respectively. Also, z_k will denote a generic measured variable and x_i will be a generic state variable. The observability issue arises when we would like to know if the m variables considered in the sensor set are enough to determine the state of the system. It depends not only on how large the number of measurements is but also on their nature and how they are spread out over the system. From an algebraic point of view, a system S is said to be *observable* if the system given by (4) is solvable, that is, the equation system is consistent and there exist at least n linear independent equations. As Krumpholz et al. define in [9], the system is said to be *algebraically observable* if and only if the rank of $\mathbf{M}$ is equal to n. A well known problem comes up when the system is *ill-conditioned* [16] and equations (4) must be solved or matrix $\mathbf{M}$ is manipulated. For such cases,

different numerical algorithms are proposed in the literature [17, 18]. In order to avoid this problem, other authors [19] take advantage of symbolic methods for sparse matrices [20]. What this paper is related to are the cases where the observability of a system such as the one defined above can be addressed in terms of structural considerations, what is called *topological observability* [9]. In order to introduce this topic, let us define some concepts and hypotheses.

Let S be an n-dimensional physical system that is going to be the object of our study and let a sensed variables set $\mathbf{z}$ be defined where m magnitudes are measured over S. Furthermore, let $\mathbf{M}$ be the $m \times n$ matrix associated to S, as defined in (4). We will say that S is a *sparse system* if the behavior of S at any point can be justified exclusively by means of the knowledge of the variables in an area based on a certain neighborhood relationship. This is the case of a traffic model system where flow fluctuations in a certain region are strongly dependent on what happens in that area, whereas the events that take place in other parts show a weak dependence or absolute independence from them. One of the features that characterize a sparse system is that matrix $\mathbf{M}$ is a sparse matrix. Then, some conclusions can be established in terms of structural considerations of $\mathbf{M}$ when the matrix dimensions and the degree of sparsity are large enough. For this purpose, Bunch and Rose [21] define a graph associated to a matrix $\mathbf{M}$ where a nonzero element $m_{ij} \neq 0$ of $\mathbf{M}$ represents an edge that joins vertices i and j. Based on this, some properties can be studied in terms of graph theory because of the duality between sparse linear systems and graphs.

The obvious solution of calculating the rank of matrix $\mathbf{M}$ may present problems and may not be even possible in the case of ill-conditioned systems, as mentioned above. In these cases, a topological based approach becomes a good choice that presents a series of additional advantages derived from the capability of graphs to answer questions related to observability analysis, including the identification of the maximum observable subsystem and optimal additional sensor placement. In short, in this paper we will introduce new topological analysis techniques by means of certain graphs associated with sparse systems in order to determine the topological observability of such systems.

3 Graph Theory

A graph is defined as a collection of nodes or vertices that are joined through so called edges or branches. For the sake of homogeneity here we will use the term branches both for general graphs and for the case of trees, which are basically graphs without loops. In the scope of this work we are interested

in defining graphs within a given network, which is also a collection of nodes and branches. In other words, a network must be interpreted as the context where any given graph is declared, in such a way that nodes and branches belonging to a graph are also present in the network for which the graph is defined. Nevertheless, not all the nodes and branches of the network are always present in a graph.

Definition 3.1 *Let $X = \{X^0, X^1\}$ be a network, where X^0 and X^1 are the sets of nodes and branches, respectively; a graph G of X is defined as a set of nodes, $G^0 \subseteq X^0$, and a set of branches, $G^1 \subseteq X^1$.*

Thus, as in the case of networks, a graph can be denoted by a couple, as follows:

$$G = \{G^0 \subseteq X^0, G^1 \subseteq X^1\} \tag{5}$$

In what follows, it is assumed that X is a connected network, that is, a network where there exists a path in X^1 between every pair of nodes of X^0. In the same way a connected or unconnected graph G of X can be defined. If a graph G of X is not connected, each connected subgraph that makes it up is known as a *connected component*. When a connected graph contains no loops, it is called a tree of X.

Definition 3.2 *A graph T of X is said to be a spanning tree if T contains no loops and $T^0 = X^0$*

A *directed graph* results from the assignment of a direction to each branch in such a way that a node is known as the *source* while another node is the *target* of a directed link.

The matrix representation of any graph G is the *node to branch incidence matrix*, $\mathbf{A}(G) = (a_{kj})$. This is a matrix with as many rows as nodes are in the graph and where the number of columns is equal to the number of branches in the graph. The elements of $\mathbf{A}(G)$, in the case of directed graphs, are defined as follows:

$$a_{kj} = \begin{cases} 1 & \text{If node } k \text{ is the source of the directed branch } j \\ -1 & \text{If node } k \text{ is the target of the directed branch } j \\ 0 & \text{If node } k \text{ is not incident to branch } j \end{cases}$$

The *rank of a graph* G of X is defined as:

$$\text{rank}\{G\} = \text{size}\{G^0\} - c \tag{6}$$

where size$\{G^0\}$ denotes the number of nodes in G while c indicates the number of connected components of G.

Definition 3.3 *Let X be a connected network, a graph G of X is said to be of full rank if its rank equals the maximum possible value,* $\text{rank}\{G\} = \text{size}\{X^0\} - 1$

The rank of a graph G of X is, by definition, equal to the rank of its associated incidence matrix $\mathbf{A}(G)$. If G is of full rank, the rank of $\mathbf{A}(G)$ equals the number of rows minus one. In other words, one row of $\mathbf{A}(G)$ is linearly dependent on the others. That is the reason why a *reduced node to branch incidence matrix* $\mathbf{A}_r(G)$ is defined, resulting from the elimination of a row from $\mathbf{A}(G)$. The following expression summarizes all of the above:

$$\text{rank}\{G\} = \text{rank}\{\mathbf{A}_r(G)\} \tag{7}$$

The selection of one node among others for which the associated row is erased is arbitrary. In what follows this node is going to be known as the *reference node.*

Definition 3.4 *The closure [22] of a connected graph G in X is defined as a graph $\overline{G}$ where $\overline{G}^0 = G^0$ and $\overline{G}^1$ is composed by all the branches in X^1 that join pairs of nodes in G^0.*

4 Network Flow Analogy

Consider a set of linear independent variables, $\{x_1, \cdots, x_n\}$, that determine the state of a system S. Let z be a system variable whose magnitude may be expressed as a linear relationship between the state variables, as follows[1]:

$$z = \alpha_1 x_1 + \cdots + \alpha_n x_n = \sum_{i=1}^{n} \alpha_i x_i \tag{8}$$

where there is at least one value of i for which $\alpha_i \neq 0$. Consider that α_s, where $1 \leq s \leq n$, is the first nonzero coefficient in the above expression. In other words, $\alpha_i = 0 \;\; \forall\, 1 \leq i < s$. Then, the expression can be rewritten as:

$$z = x_s \sum_{i=s}^{n} \alpha_i - \sum_{i=s+1}^{n} (x_s - x_i)\, \alpha_i \tag{9}$$

[1] *Notation*: In what follows, subscripts i and j, $1 \leq i, j \leq n$ are used to refer to generic state variables and network nodes; subscript s, $1 \leq s \leq n$ refers to a node that is known as source node; subscript k, $1 \leq k \leq m$ denotes measurements and equations; subscript a, $1 \leq a \leq r$ refers to generic network branches; subscript b under arrays or vectors denotes that those structures contain exclusively branch parameters or variables.

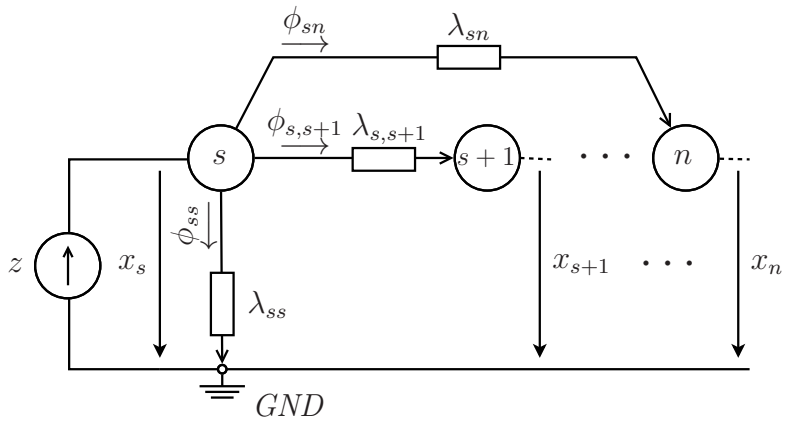

Figure 1: Elementary network

which is consistent with the analogy to a flow network as shown in Figure 1. In it, a current z is injected into the network through node s and flows to the remaining nodes, $s+1$ to n, according to the admittance values and potential differences of the branches connecting them. Therefore, the following equality must hold:

$$z = \sum_{i=s}^{n} \phi_{si} = x_s \lambda_{ss} + \sum_{i=s+1}^{n} (x_s - x_i)\, \lambda_{si} \tag{10}$$

where, for a generic node i, x_i represents the potential level of the node with respect to a *zero potential reference node*, *GND* in the figure; $\lambda_{si} = -\alpha_i$ represents the *admittance* that characterizes a branch connecting node s to node i, so that $\phi_{si} = (x_s - x_i)\, \lambda_{si}$ is the *current* that flows from node s to node i due to the potential difference $(x_s - x_i)$ observed from node s to node i; similarly, $\lambda_{ss} = \sum_{i=s}^{n} \alpha_i$ is the admittance between node s and *GND*; hence, a current $\phi_{ss} = x_s \lambda_{ss}$ flows from node s to the reference node. The network in Figure 1 is defined as the *elementary network* associated to the linear equation (10), which is known as the *network nodal equation* at node s. The elementary network is a tree and s is defined as the *source node* of that tree while the remaining nodes are considered *target nodes*.

Note that, on one hand, the elementary network in Figure 1 is characterized by the nodal equation (10) where the flow $\phi_s = \sum_{i=s}^{n} \phi_{si}$ injected in node s equals the z magnitude; on the other hand, a solution $\{x_s, \cdots, x_n\}$ to the elementary network in Figure 1 is consistent with equation (8).

Let S be a system where $\{z_1, \cdots, z_m\}$ is a set of m variables whose magnitudes may be expressed as linear relationships of the form:

$$z_k = \alpha_{k1} x_1 + \cdots + \alpha_{kn} x_n = \sum_{i=1}^{n} \alpha_{ki} x_i \qquad \forall\, 1 \le k \le m \tag{11}$$

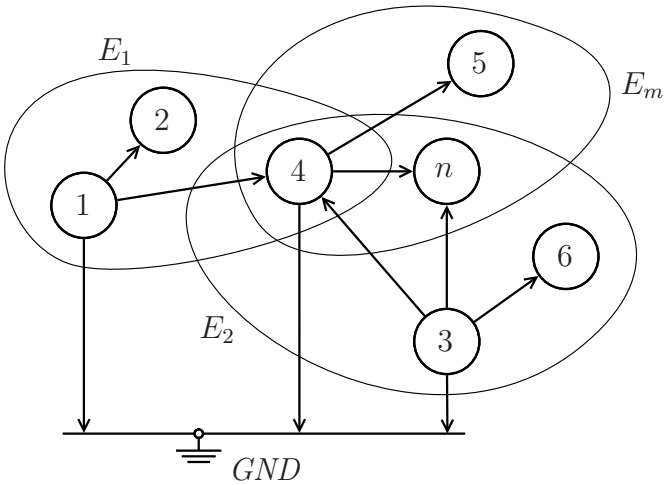

Figure 2: Associated network X resulting from the superposition of m elementary networks

A *network associated* to a linear equation system such as the one shown above is defined as the result of the superposition of the elementary networks associated to each z_k, $\forall\ 1 \leq k \leq m$. Then, the solvability of the linear equation system (11) is equivalent to that of its associated network since a particular solution $\{x_1, \cdots, x_n\}$ to the equation system is consistent with the associated network. Figure 2 shows an example of an associated network X as a result of considering all the elementary networks in their entirety, denoted by $E_1, E_2, \cdots, E_m$. Let us take a look at a generic node in the figure, such as node number 4. It is easy to see how the incident branches to node 4 are due to elementary networks associated to variables for which 4 is the source node, such as E_m, and those elementary networks including 4 as a flow target node, such as E_1 and E_2.

Let E_k be the elementary network associated to a generic variable z_k defined in S as shown in equation (11) where s is the source node. A *branch admittance matrix* of E_k is defined as a diagonal matrix as follows:

$$\mathbf{Y}_b(E_k) = \begin{pmatrix} \sum_{i=s}^{n} \alpha_{ki} & & & 0 \\ & -\alpha_{k,s+1} & & \\ & & \ddots & \\ 0 & & & -\alpha_{kn} \end{pmatrix} \tag{12}$$

In what follows, it is assumed that all coefficients α_{ki} considered in the construction of a matrix $\mathbf{Y}_b(E_k)$, such as the one defined above, are nonzero. In other words, null coefficients, α_{ki}, are removed from equation (11). Note that this constraint does not guarantee that all diagonal elements in $\mathbf{Y}_b(E_k)$ are

nonzero because there might exist a case in which, for a certain k, the sum $\sum_{i=1}^{n} \alpha_{ki}$ equals zero. Those cases are related to the concept of parametric unobservability, and it will be introduced later.

Taking into account the contribution of all the variables $\{z_1, \cdots, z_m\}$ in S to the whole associated network X, a *branch admittance matrix* of X is defined as a block diagonal matrix:

$$\mathbf{Y}_b(X) = \begin{pmatrix} \mathbf{Y}_b(E_1) & & 0 \\ & \ddots & \\ 0 & & \mathbf{Y}_b(E_m) \end{pmatrix} \tag{13}$$

Then, the following equality is satisfied:

$$\begin{aligned} \mathbf{\Phi}_b(X) &= \mathbf{Y}_{\mathbf{A}}(X) \cdot \mathbf{x} \\ \mathbf{Y}_{\mathbf{A}}(X) &= \mathbf{Y}_b(X) \cdot \mathbf{A}_r^{\top}(X) \end{aligned} \tag{14}$$

where $\mathbf{A}_r(X)$ is the reduced node to branch incidence matrix of X; $\mathbf{x} = (x_i)$ is the $n \times 1$ *nodal potential vector*, that is, the system state variable column vector; if r is the number of branches in X and they are numbered from 1 to r, $\mathbf{\Phi}_b(X) = (\phi_a)$ is the $r \times 1$ *branch flow vector*, that is, a column vector of magnitudes that flow through branches in X; $\mathbf{Y}_{\mathbf{A}}(X)$ is a $r \times n$ matrix that relates potentials x_i at nodes in X with branch flows ϕ_a.

Equations (11) can be expressed in matrix form as follows:

$$\mathbf{z} = \mathbf{M} \cdot \mathbf{x} \tag{15}$$

where $\mathbf{M} = (\alpha_{ki})$ is defined as a $m \times n$ coefficient matrix and where $\mathbf{z} = (z_k)$ and $\mathbf{x} = (x_i)$ are column vectors. Note that each row k of $\mathbf{M}$, that is, each variable z_k considered in the system, will result in an elementary network of X that is a tree because of the lack of loops. Therefore, as any branch in X arises from the existence of a nonzero element in $\mathbf{M}$, a $m \times r$ *equation to branch incidence matrix*, $\mathbf{B}(X) = (b_{ka})$, associated to X can also be defined as follows:

$$b_{ka} = \begin{cases} 1 & \text{If branch } a \text{ of } X \text{ arises from row } k \text{ of } \mathbf{M} \\ 0 & \text{otherwise} \end{cases}$$

The following equality holds:

$$\mathbf{M} = \mathbf{B}(X) \cdot \mathbf{Y}_{\mathbf{A}}(X) = \mathbf{B}(X) \cdot \mathbf{Y}_b(X) \cdot \mathbf{A}_r^{\top}(X) \tag{16}$$

Equation (14) characterizes network X as well as equation (15) characterizes system S from a set of variables $\{z_1, \cdots, z_m\}$ and, therefore, from equalities (14) and (16) it can be concluded that the study of the determinism of S is equivalent to the observability of X under constraints related to the variables z_k taken into account.

5 Topological Observability

Krumpholz et al. introduced in [9] the term parametric unobservability as a vague notion needed to justify the concept of topological observability in electric power networks under certain assumptions. In this section we present a formal description that allows defining and characterizing parametric unobservability and demonstrates how topological observability can be addressed by means of the existence of certain graphs under constraints.

Let S be a large n-dimensional sparse physical system where a sensing system $\mathbf{z}$ is defined by means of m measured variables, $m \geq n$. Let $\mathbf{M}$ be the coefficient matrix, as defined in (15), associated to S and the sensing system and let X be the associated network. It is important to note that $\mathbf{M}$ characterizes only those parts of the system related to measurements, but not the whole physical system. In particular, it shows the relationship between the sensor set considered and the state variables. Therefore, $\mathbf{M}$ might be a diagonal or block diagonal matrix, without implying either the existence or nonexistence of decoupled subsystems in S. Obviously, the observability analysis of decoupled subsystems, if they exist, can be carried out independently.

The necessary and sufficient condition for algebraic observability of a system S and a sensing configuration $\mathbf{z}$, as proposed above, is:

$$\text{rank}\{\mathbf{M}\} = n \tag{17}$$

Let us consider an algebraically observable system S with respect to a sensor set $\mathbf{z}$. As $\mathbf{M}$ is an $m \times n$ matrix and $m \geq n$, from equation (17) it follows that a collection of n linearly independent rows of $\mathbf{M}$ can be found. Let $\mathbf{z}^n$ be the subset of $\mathbf{z}$ corresponding to those linearly independent rows of $\mathbf{M}$. Therefore, an equation subsystem might be defined in S with respect to $\mathbf{z}^n$, that should be characterized using an $n \times n$ coefficient matrix $\mathbf{M}^n$ and its associated network X^n in such a way that:

$$\mathbf{z}^n = \mathbf{M}^n \cdot \mathbf{x} \tag{18}$$

where $\mathbf{z}^n \subseteq \mathbf{z}$, $X^n \subseteq X$ and the determinant $|\mathbf{M}^n| \neq 0$. $\mathbf{z}^n$ is known as a *critical sensing configuration* in the sense that the loss of any measurement in $\mathbf{z}^n$ should derive in the loss of the observability condition with respect to $\mathbf{z}^n$. For the same reason, system S is said to be *critically observable* with respect to $\mathbf{z}^n$. The determinant $|\mathbf{M}^n|$ is calculated as a sum of products, each coming from n elements in $\mathbf{M}^n$, and no two coming from the same row or column. Since $\mathbf{M}^n$ is a nonsingular matrix, at least one of these products must be nonzero. Thus, without loss of generality, in what follows let a permutation

of rows be considered such that all the factors of the aforementioned non null product lie on the principal diagonal of $\mathbf{M}^n$. Note that any row permutation in $\mathbf{M}^n$ does not alter the associated network X^n.

It is clear that the first entry in $\mathbf{M}^n$ in the first row is non-null and, therefore, there exists in X^n a branch joining node 1 and the reference node. In the second row there are two possible cases: on one hand, if the diagonal element is the first nonzero element in that row, there exists a branch in X^n joining node 2 and the reference node and, indirectly, the first node too; on the other hand, if the diagonal element is not the first nonzero one, there is a link in X^n between nodes 2 and 1. This argument can be repeated for the next row and up to the last one. Eventually, a spanning tree of full rank T of X^n is completed, because of the lack of loops and the inclusion of the totallity of the nodes in the network. Furthermore, the previous analysis leads exclusively to one branch in T from each row in $\mathbf{M}^n$. In other words, the n branches in T are derived from n different measurements in $\mathbf{z}$. Since X^n results from the superposition of n elementary networks, one for each sensed value, each branch in T belongs to a different elementary network.

In order to demonstrate that the existence of such a spanning tree is sufficient, under certain conditions, for the observability of a system with respect to a sensing configuration, a reverse path is considered in which branches are added recursively to a starting spanning tree until the entire network is encompassed.

Consider a spanning tree T of X^n where each one of the n branches of T belongs to a different elementary network out of the n that form X^n. That is, each elementary network in X^n has a branch and only one that belongs to T. From equation (16) it follows that a matrix $\mathbf{M}(T)$ can be defined as:

$$\mathbf{M}(T) = \mathbf{B}(T) \cdot \mathbf{Y_A}(T) \tag{19}$$

where $\mathbf{B}(T)$ is a selection of columns from $\mathbf{B}(X^n)$ while $\mathbf{Y_A}(T)$ is a selection of rows from $\mathbf{Y_A}(X^n)$ corresponding to the n branches of T. Thus, $\mathbf{B}(T)$ is the $n \times n$ identity matrix because the n branches of T belong to n different elementary networks and it follows that:

$$\mathbf{M}(T) = \mathbf{Y_A}(T) \tag{20}$$

Note that as $\mathbf{Y_A}(T)$ has the same sparse pattern as $\mathbf{A}_r^\top(T)$ and T is a spanning tree of X^n of full rank, $\text{rank}\{\mathbf{Y_A}(T)\} = n$. In other words, $|\mathbf{M}(T)| \neq 0$ because $\mathbf{M}(T)$ is nonsingular. Let k be a generic row of $\mathbf{M}(T)$. The first nonzero entry in row k is in the same column, generically represented by s, as the first nonzero element in row k of $\mathbf{M}^n$. At this point, two cases might take place: one in which column s is the only nonzero entry in row k and

another for which there exists a second nonzero element in column l of row k in $\mathbf{M}(T)$. Since the determinant of a square matrix can be calculated, according to Laplace's formula, as a weighed sum of cofactors or adjuncts along a row or a column, it follows that:

$$|\mathbf{M}(T)| = m_{ks} \cdot C_{ks} + m_{kl} \cdot C_{kl} \neq 0 \tag{21}$$

where m_{ks} and m_{kl} are the elements of $\mathbf{M}(T)$ in row k and columns s and l, respectively, and C_{ks} and C_{kl} are their cofactors. Taking into account the same notation as used in equation (11), if m_{ks} is the only nonzero entry in row k, $m_{ks} = \sum_{i=s}^{n} \alpha_{ki}$; otherwise, $m_{ks} = -m_{kl} = \alpha_{kl}$. In both cases, the determinant must be different from zero.

Let T^{+1} be a graph of X^n that results from the union of T and one branch a of X^n not in T. Consider that the additional branch belongs to an elementary network E_k that corresponds to row k of $\mathbf{M}(T)$ and whose source node is denoted by s. If matrix $\mathbf{M}(T^{+1}) = (m_{ki}^{+1})$ is defined from T^{+1} in the same way as matrix $\mathbf{M}(T)$ was from T, then, two different cases may follow:

1. The additional branch a joins node s and the reference one. Therefore, as the admittance of this branch is equal to $\lambda_a = \sum_{i=s}^{n} \alpha_{ki}$, the only entry that makes matrices $\mathbf{M}(T)$ and $\mathbf{M}(T^{+1})$ different is:

$$m_{ks}^{+1} = m_{ks} + \sum_{i=s}^{n} \alpha_{ki} \tag{22}$$

   and, from Equation (21), the determinant

$$|\mathbf{M}(T^{+1})| = |\mathbf{M}(T)| + \sum_{i=s}^{n} \alpha_{ki} \cdot C_{ks} \tag{23}$$

   that is equal to zero when:

$$\lambda_a = \sum_{i=s}^{n} \alpha_{ki} = \frac{|\mathbf{M}(T)|}{-C_{ks}} \tag{24}$$

2. The additional branch a joins node s and a node j, where $s < j \leq n$. In this case, the branch admittance equals $\lambda_a = -\alpha_{kj}$ and both matrices $\mathbf{M}(T)$ and $\mathbf{M}(T^{+1})$ are equal but for two entries in row k:

$$\begin{aligned} m_{ks}^{+1} &= m_{ks} - \alpha_{kj} \\ m_{kj}^{+1} &= \alpha_{kj} \end{aligned} \tag{25}$$

and, again, the determinant

$$|\mathbf{M}(T^{+1})| = |\mathbf{M}(T)| + \alpha_{kj} \cdot (C_{kj} - C_{ks}) \tag{26}$$

that vanishes when:

$$\lambda_a = -\alpha_{kj} = \frac{|\mathbf{M}(T)|}{C_{kj} - C_{ks}} \tag{27}$$

Consider T^{+r} to be a graph of X^n that results from the addition to T of a number r of branches of X^n not in T and let the matrix $\mathbf{M}(T^{+r})$ be defined such that $|\mathbf{M}(T^{+r})| \neq 0$. Let T^{+r+1} be a graph of X^n formed after the inclusion in T^{+r} of a branch a of X^n not in T^{+r} and consider that the additional branch belongs to an elementary network E_k that corresponds to row k of $\mathbf{M}(T^{+r})$ for which the source node is denoted by s. One of the next two cases will follow:

1. The additional branch a joins nodes s and the reference one. The admittance of branch a is equal to $\lambda_a = \sum_{i=s}^{n} \alpha_{ki}$ and the determinant of $\mathbf{M}(T^{+r+1})$ is estimated by:

$$|\mathbf{M}(T^{+r+1})| = |\mathbf{M}(T^{+r})| + \sum_{i=s}^{n} \alpha_{ki} \cdot C_{ks}^{+r} \tag{28}$$

   where C_{ks}^{+r} is the cofactor of m_{ks}^{+r}. The above determinant becomes null when:

$$\lambda_a = \sum_{i=s}^{n} \alpha_{ki} = \frac{|\mathbf{M}(T^{+r})|}{-C_{ks}^{+r}} \tag{29}$$

2. The additional branch a joins node s and a node j, where $s < j \leq n$. Then, the branch admittance is equal to $\lambda_a = -\alpha_{kj}$ and the determinant of $\mathbf{M}(T^{+r+1})$ is given by:

$$|\mathbf{M}(T^{+r+1})| = |\mathbf{M}(T^{+r})| + \alpha_{kj} \cdot (C_{kj}^{+r} - C_{ks}^{+r}) \tag{30}$$

   where C_{kj}^{+r} and C_{ks}^{+r} are the cofactors of m_{kj}^{+r} and m_{ks}^{+r}, respectively. The determinant will be null if:

$$\lambda_a = -\alpha_{kj} = \frac{|\mathbf{M}(T^{+r})|}{C_{kj}^{+r} - C_{ks}^{+r}} \tag{31}$$

Figure 3: Four node network example

(a) Associated network X (b) Sspanning tree T

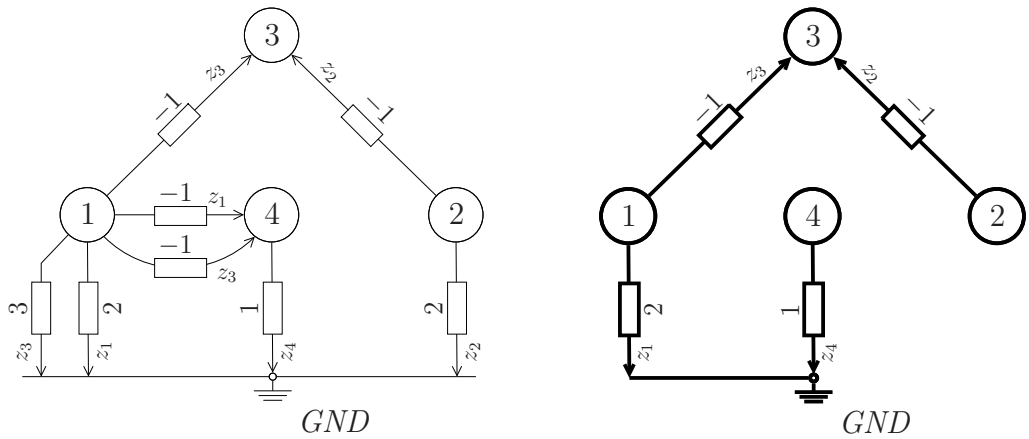

Note that Equations (29) and (31) allow identifying a set of values of coefficients α_{ki} for which the determinant $|\mathbf{M}(T^{+r+1})|$ might be canceled.

New branches can be added to the given graph, one by one, until the entire network X^n is completed, after the inclusion of all the branches in X^n. Therefore, it is concluded by induction that the determinant of matrix $\mathbf{M}(X^n)$ is nonzero if its entries α_{ki}, $1 \leq k, i \leq n$, do not meet any equality such as Equations (24) and (29) for branches that join the reference node and Equations (27) and (31) otherwise.

Consider an example in which a collection of four sensed magnitudes $\mathbf{z} = (z_1, \cdots, z_4)^\top$ are acquired from a four dimensional physical system. As a result, an equal number of linear equations that relate $\mathbf{z}$ and the state variables $\mathbf{x} = (x_1, \cdots, x_4)^\top$ are established and a matrix of coefficients $\mathbf{M}$ is given by:

$$\underbrace{\begin{pmatrix} 1 & 0 & 0 & 1 \\ 0 & 1 & 1 & 0 \\ 1 & 0 & 1 & 1 \\ 0 & 0 & 0 & 1 \end{pmatrix}}_{\substack{\mathbf{M} \\ 4 \times 4}} = \underbrace{\begin{pmatrix} 1 & 1 & 0 & 0 & 0 & 0 & 0 & 0 \\ 0 & 0 & 1 & 1 & 0 & 0 & 0 & 0 \\ 0 & 0 & 0 & 0 & 1 & 1 & 1 & 0 \\ 0 & 0 & 0 & 0 & 0 & 0 & 0 & 1 \end{pmatrix}}_{\substack{\mathbf{B}(X) \\ 4 \times 8}} \cdot \underbrace{\begin{pmatrix} 2 & 0 & 0 & 0 \\ -1 & 0 & 0 & 1 \\ 0 & 2 & 0 & 0 \\ 0 & -1 & 1 & 0 \\ 3 & 0 & 0 & 0 \\ -1 & 0 & 1 & 0 \\ -1 & 0 & 0 & 1 \\ 0 & 0 & 0 & 1 \end{pmatrix}}_{\substack{\mathbf{Y_A}(X) \\ 8 \times 4}} \tag{32}$$

Figure 4: Four node network example

(a) Graph T^{+1}

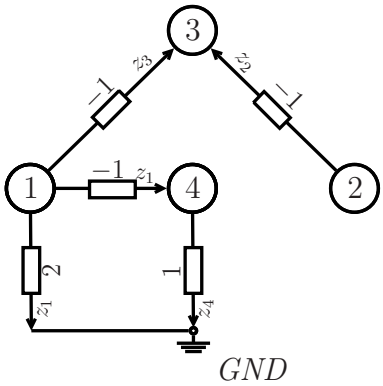

$$\mathbf{M}(T^{+1}) = \begin{pmatrix} 1 & 0 & 0 & 1 \\ 0 & -1 & 1 & 0 \\ -1 & 0 & 1 & 0 \\ 0 & 0 & 0 & 1 \end{pmatrix}$$

(b) Graph T^{+2}

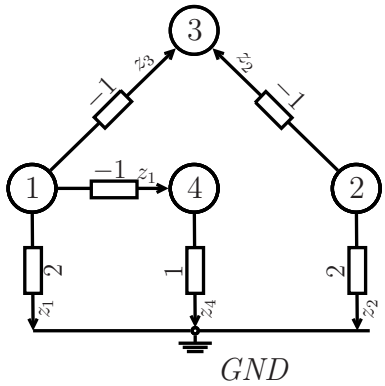

$$\mathbf{M}(T^{+2}) = \begin{pmatrix} 1 & 0 & 0 & 1 \\ 0 & 1 & 1 & 0 \\ -1 & 0 & 1 & 0 \\ 0 & 0 & 0 & 1 \end{pmatrix}$$

(c) Graph T^{+3}

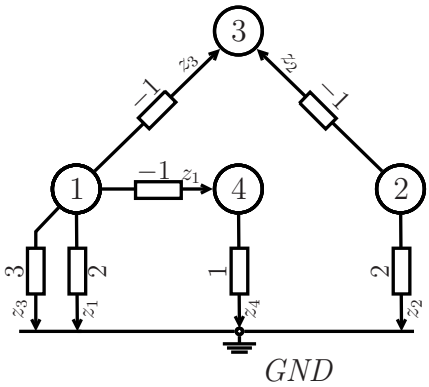

$$\mathbf{M}(T^{+3}) = \begin{pmatrix} 1 & 0 & 0 & 1 \\ 0 & 1 & 1 & 0 \\ 2 & 0 & 1 & 0 \\ 0 & 0 & 0 & 1 \end{pmatrix}$$

(d) Graph $T^{+4} = X$

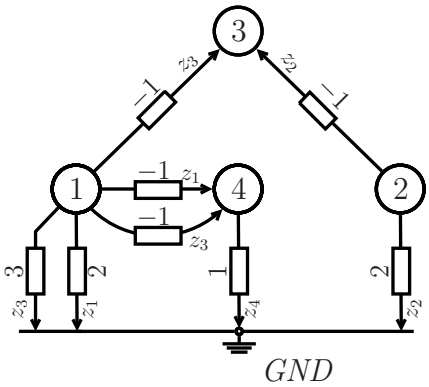

$$\mathbf{M}(T^{+4}) = \begin{pmatrix} 1 & 0 & 0 & 1 \\ 0 & 1 & 1 & 0 \\ 1 & 0 & 1 & 1 \\ 0 & 0 & 0 & 1 \end{pmatrix} = \mathbf{M}$$

Figure 3a shows the resulting associated network, where the branch admittance values are indicated as well as the sensed variables to which each branch is associated. Figure 3b shows a spanning tree T of full rank, in which it can be noted that the four branches that conform the tree are associated to four

different measured variables. Then, it follows that:

$$\underbrace{\begin{pmatrix} 2 & 0 & 0 & 0 \\ 0 & -1 & 1 & 0 \\ -1 & 0 & 1 & 0 \\ 0 & 0 & 0 & 1 \end{pmatrix}}_{\mathbf{M}(T)} = \underbrace{\begin{pmatrix} 1 & 0 & 0 & 0 \\ 0 & 1 & 0 & 0 \\ 0 & 0 & 1 & 0 \\ 0 & 0 & 0 & 1 \end{pmatrix}}_{\mathbf{B}(T)} \underbrace{\begin{pmatrix} 2 & 0 & 0 & 0 \\ 0 & -1 & 1 & 0 \\ -1 & 0 & 1 & 0 \\ 0 & 0 & 0 & 1 \end{pmatrix}}_{\mathbf{Y_A}(T)} \tag{33}$$

where $|\mathbf{M}(T)| \neq 0$. The graphs in figure 4 show how the entire network X can be reached from T by the addition of each branch of X not belonging to T and how, at each step $r+1$, a new $\mathbf{M}(T^{+r+1})$ is defined from the previous one $\mathbf{M}(T^{+r})$ after modifying one or two matrix entries, depending on the case. It can be seen that it always follows that $|\mathbf{M}(T^{+r+1})| \neq 0$ except for the exception cases defined in (24), (27), (29) and (31).

Note that this result was reached from the consideration of, on one hand, the network topology and the number, nature and location of sensors in the network and, on the other hand, the network parameters. To deal with these two approaches, the concept of *parametric unobservability* is introduced.

Definition 5.1 *A large dimensional and sparse physical system S, for which a sensing system $\mathbf{z}$ is defined, is said to be parametrically unobservable with respect to $\mathbf{z}$ if, in spite of the fact that the ranks of matrices $\mathbf{B}(X)$ and $\mathbf{Y_A}(X)$ are equal to n, the rank of $\mathbf{M}$ is less than n due to the value of one or more coefficients α_{ki} of $\mathbf{M}$.*

The relevance of this concept lies in the fact that, in large dimensional sparse physical systems where the parameters are roughly estimated from empirical data or are subject to environmental distortion, it is unlikely for parametric unobservability to occur [9]. In other fields, such as structured linear systems, it is often necessary to work under the assumption of a lack of knowledge of system parameters [4]. In these scenarios, the parametrically unobservability should be associated with a particular set of parameter values. Thus, the observability of a system is said to be true when it is so for almost all parameter values, that is, for all of them except for a set of particular cases in the parameter space. Even though not all physical systems may meet this requirements, there exist evidences that it is true for real cases. For example, electric power network analysis involves hundreds or even thousands of state variables that are usually related to the voltage at network nodes. The system state [7] can be estimated by means of the measurement of the power that flows into and through the electric network and which is influenced only by neighboring node states. Thus, the resulting

system is clearly sparse and circuit parameters are affected by environmental conditions, such as temperature and humidity, as well as by the unreliability of parameter estimation. Another example is the case of traffic model analysis [10]. As explained later in the example in this paper, vehicles usually move along a geographical area according to a set of established origin/destination pairs. Traffic flows are sensed at routes in the network in order to estimate the state of the system, that is, origin/destination pair traffic flows. As the network grows, the sparsity becomes more plausible. Additionally, system coefficients are estimated, among other factors, from probabilistic considerations related to the ability of people to opt for one route or another. In brief, parametric unobservability is, in these two cases, highly improbable despite being mathematically possible.

On the basis of the large dimension, sparsity and parameterization uncertainty of such systems, in order to address the observability issue a new strategy is proposed involving exclusively structural and not numerical considerations. For this, a new observability definition should be provided.

Definition 5.2 *Let S be a large dimensional sparse physical system where a sensor network $\mathbf{z}$ is considered; S with $\mathbf{z}$ is said to be topologically observable if S is algebraically observable or parametrically unobservable with respect to $\mathbf{z}$.*

Summarizing, it has been demonstrated that the existence of a spanning tree of full rank T of X where the n branches of T belong to n different elementary networks of X constitutes a necessary and sufficient condition for topological observability. In what follows, any graph G of X with a number r_G of branches that belong to r_G different elementary networks, that is, are associtated to r_G different measurements z_k of $\mathbf{z}$, is known as a *measured graph*.

Theorem 5.3 *Let S be a linear and large n-dimensional sparse physical system where a sensing system $\mathbf{z}$ is defined by means of a number of m measured variables, $m \geq n$; S is said to be topologically observable with respect to $\mathbf{z}$ if and only if there exists a measured spanning tree T of X.*

The analysis of the observability of a large dimensional sparse physical system S with respect to a sensing system $\mathbf{z}$ from a topological point of view involves searching for a measured spanning tree T of full rank among all possible graphs G of X constructed in such a way that each elementary network that forms X contributes with and only with one branch to G. If the number of sensed values m considered is larger than the dimension n of system S, T will be included, if it exists, as part of a measured spanning

graph G of X. In what follows, it is assumed that any graph G of X is a measured graph.

There could be different ways to construct a spanning tree and any one of them would be valid [12, 13, 14, 15]. However what is important here is the fact that the existence of a measured spanning tree is a sufficient condition for the topological observability of a linear system.

Summarizing, taking as a basis the experience in observability analysis in electric power systems, a generalization of the topological approach was developed to address this issue in the scope of other linear, or linearized after a first order derivative, real engineering physical systems. A necessary and sufficient condition for topological observability was established by means of a graph theoretic approach. Finally, thanks to this approach, the characterization of the cases where algebraic strategies do not lead to the same results as those derived from structural analysis was carried out.

6 Maximum Observable Subsystem and Observability Islands

If the observability system test fails for a sensing configuration, it is said that the system is *not observable* or *unobservable*. In such cases, the knowledge that might be acquired about one or more parts of the system by all the measures considered should not be underestimated. If a system is not observable, it may be possible to identify a subsystem for which the state can be estimated, it is said that the subsystem is observable. A non-divisible observable subsystem is known as an *observability island*. The number of observability islands may vary and depends on the associated network topology, the sensors considered and their location in the network.

Consider an n-dimensional sparse physical system S and a sensing configuration $\mathbf{z}$ for which an associated network X is defined. Let O be an observable island of S and $\mathbf{z}$ and let $X^O \subseteq X$ be its associated subnetwork; X^O is known as an *observable subnetwork*.

A node belonging to X^O is said to be an *observable node*, and a branch belonging to X^O is an *observable branch*. A measured spanning graph G of X^O is known as an *observable graph*. Nodes and branches that do not belong to any observable subnetwork are said to be unobservable.

Let Y be a measured graph of X; a measure z_k associated to a branch of Y is said to be *wholly contained* [22] in Y if the elementary network associated to z_k is contained in the closure of Y in X. By extension, a measure is said to be wholly contained in a subnetwork X^O if its associated elementary network

is included in the closure of X^O in X.

Any measurement z_k considered in O is wholly contained in X^O. Hence, the state of an observability island may be estimated by means of a wholly contained sensor set.

The union of all the observability islands in a system S derives in a *maximum observable subsystem* while the union of all their associated observable subnetworks in X results in the *maximum observable subnetwork*. This subnetwork is maximum because it comprises the largest possible number of observable nodes and, if it exists, it is unique [22].

Consider a system S that is not observable for a sensor set $\mathbf{z}$. Then, no measured spanning tree will be found, as derived from theorem 5.3. Instead, consider a measured graph G of X as one of the largest connected graphs that can be formed according to the sensing system and the constraints described earlier. Then, G is known as a *maximum measured graph* of X but not spanning. The next theorem was extracted from [22], where relevant properties concerning maximum measured graphs and observable subsystems are described.

Theorem 6.1 *Let S be a system and X the associated network from a given sensor set. If G is any maximum measured graph of X, the maximum observable subnetwork is contained in the closure of G in X.*

Therefore, based on one of the maximum measured graphs, an iterative process can take place by which the not wholly contained measurements and their elementary networks are removed from the system until the maximum observable subnetwork is obtained. Additionally, other strategies concerning the search for the maximum observable subsystem can be found in [13, 14] in the scope of electric power networks.

7 Examples

Two examples are presented in this section in order to illustrate the techniques developed in this paper, focusing the attention on the fact that these techniques are valid for different real engineering problems where a collection of linear equations or equations linearized after a first order derivative describe the behavior of the system from a measurement acquisition system viewpoint.

7.1 Traffic Model Example

One of the fundamental problems in traffic models concerns the estimation of the *Origin/Destination* (OD) trip matrix. *Traffic flows* are measured by

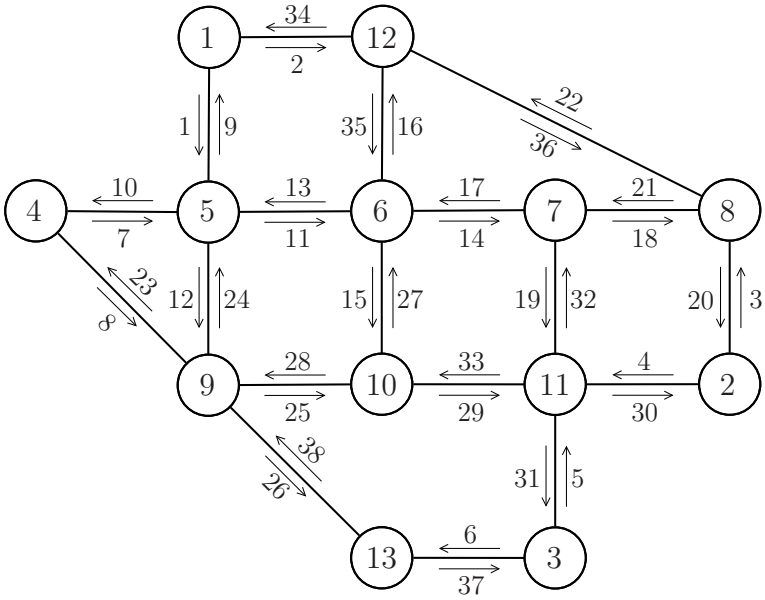

Figure 5: Nguyen-Dupuis traffic network example

means of sensors spread out at different locations in a study area. This data, in conjunction with other available information, are used to estimate the *target matrix*, that is, the traffic derived from any OD movement. For each OD-pair there exist, in general, more than one alternative to complete the trip that are usually expressed in terms of percentages or probabilities based on contextual factors. In addition, the flow magnitudes at a link in a traffic network can be broken down into percentages of vehicules moving along different OD trips. Thus, linear relantionships can be established between OD-pair and link flows. Let $\mathbf{t} = (t_{od})$ and $\mathbf{v} = (v_b)$ be OD-pair and link flow vectors, respectively; their linear relationships can be described by a matrix $\mathbf{F}$ as follows:

$$\mathbf{v} = \mathbf{F} \cdot \mathbf{t} \tag{34}$$

Figure 5 shows a benchmark case, known as the Nguyen-Dupuis network [23] in the literature, consisting of 13 plausible origin/destination places that are interconnected by 19 bidirectional links. In that scenario, vehicles can move from one place to another through suitable routes. Figure 5 shows indices assigned to links along with their directions. Therefore, for an OD-pair, any possible path is defined as a series of oriented link indices; e.g. the sequence $\{2, 36, 20\}$ denotes an alternative for a displacement from 1 (origin) to 2 (destination).

In what follows it is assumed that matrix $\mathbf{F}$ and the OD-pairs are known. Below are all the OD-pairs considered in this example and their potential

paths as well as matrix $\mathbf{F}$. They are the same as those tested in [10]:

$$
\begin{array}{ll}
\text{OD-pair 1-2:} & \{2,36,20\} \\
\text{OD-pair 1-3:} & \{1,11,14,19,31\},\ \{1,11,15,29,31\} \\
 & \{1,12,25,29,31\},\ \{1,12,26,37\} \\
 & \{2,35,14,19,31\},\ \{2,35,15,29,31\} \\
\text{OD-pair 2-1:} & \{3,21,17,13,9\},\ \{3,21,17,16,34\} \\
 & \{3,22,34\},\ \{4,32,17,13,9\} \\
 & \{4,32,17,16,34\},\ \{4,33,27,13,9\} \\
 & \{4,33,27,16,34\},\ \{4,33,28,24,9\} \\
\text{OD-pair 2-4:} & \{3,21,17,13,10\},\ \{4,32,17,13,10\} \\
 & \{4,33,27,13,10\},\ \{4,33,28,23\} \\
 & \{4,33,28,24,10\} \\
\text{OD-pair 3-1:} & \{5,32,17,13,9\},\ \{5,32,17,16,34\} \\
 & \{5,33,27,13,9\},\ \{5,33,27,16,34\} \\
 & \{5,33,28,24,9\},\ \{6,38,24,9\} \\
\text{OD-pair 3-4:} & \{5,32,17,13,10\},\ \{5,33,27,13,10\} \\
 & \{5,33,28,23\},\ \{5,33,28,24,10\} \\
 & \{6,38,23\},\ \{6,38,24,10\} \\
\text{OD-pair 4-2:} & \{7,11,14,18,20\},\ \{7,11,14,19,30\} \\
 & \{7,11,15,29,30\},\ \{7,12,25,29,30\} \\
 & \{8,25,29,30\} \\
\text{OD-pair 4-3:} & \{7,11,14,19,31\},\ \{7,11,15,29,31\} \\
 & \{7,12,25,29,31\},\ \{7,12,26,37\} \\
 & \{8,25,29,31\},\ \{8,26,37\}
\end{array}
\quad
\mathbf{F} = \begin{pmatrix}
\cdot & 4 & \cdot & \cdot & \cdot & \cdot & \cdot & \cdot \\
1 & 2 & \cdot & \cdot & \cdot & \cdot & \cdot & \cdot \\
\cdot & \cdot & 3 & 1 & \cdot & \cdot & \cdot & \cdot \\
\cdot & \cdot & 5 & 4 & \cdot & \cdot & \cdot & \cdot \\
\cdot & \cdot & \cdot & \cdot & 5 & 4 & \cdot & \cdot \\
\cdot & \cdot & \cdot & \cdot & 1 & 2 & \cdot & \cdot \\
\cdot & \cdot & \cdot & \cdot & \cdot & \cdot & 4 & 4 \\
\cdot & \cdot & \cdot & \cdot & \cdot & \cdot & 1 & 2 \\
\cdot & \cdot & -4 & \cdot & -4 & \cdot & \cdot & \cdot \\
\cdot & \cdot & \cdot & -4 & \cdot & -4 & \cdot & \cdot \\
\cdot & 2 & \cdot & \cdot & \cdot & \cdot & 3 & 2 \\
\cdot & 2 & \cdot & \cdot & \cdot & \cdot & 1 & 2 \\
\cdot & \cdot & -3 & -3 & -2 & -2 & \cdot & \cdot \\
\cdot & 2 & \cdot & \cdot & \cdot & \cdot & 2 & 1 \\
\cdot & 2 & \cdot & \cdot & \cdot & \cdot & 1 & 1 \\
\cdot & \cdot & 3 & \cdot & 2 & \cdot & \cdot & \cdot \\
\cdot & \cdot & -4 & -2 & -2 & -1 & \cdot & \cdot \\
\cdot & \cdot & \cdot & \cdot & \cdot & \cdot & 1 & \cdot \\
\cdot & 2 & \cdot & \cdot & \cdot & \cdot & 1 & 1 \\
-1 & \cdot & \cdot & \cdot & \cdot & \cdot & -1 & \cdot \\
\cdot & \cdot & -2 & -1 & \cdot & \cdot & \cdot & \cdot \\
\cdot & \cdot & 1 & \cdot & \cdot & \cdot & \cdot & \cdot \\
\cdot & \cdot & \cdot & -1 & \cdot & -2 & \cdot & \cdot \\
\cdot & \cdot & -1 & -1 & -2 & -2 & \cdot & \cdot \\
\cdot & 1 & \cdot & \cdot & \cdot & \cdot & 2 & 2 \\
\cdot & 1 & \cdot & \cdot & \cdot & \cdot & \cdot & 2 \\
\cdot & \cdot & -2 & -1 & -2 & -1 & \cdot & \cdot \\
\cdot & \cdot & -1 & -2 & -1 & -2 & \cdot & \cdot \\
\cdot & 3 & \cdot & \cdot & \cdot & \cdot & 3 & 3 \\
\cdot & \cdot & \cdot & \cdot & \cdot & \cdot & -4 & \cdot \\
\cdot & -5 & \cdot & \cdot & \cdot & \cdot & \cdot & -4 \\
\cdot & \cdot & -2 & -1 & -2 & -1 & \cdot & \cdot \\
\cdot & \cdot & -3 & -3 & -3 & -3 & \cdot & \cdot \\
\cdot & \cdot & -4 & \cdot & -2 & \cdot & \cdot & \cdot \\
\cdot & -2 & \cdot & \cdot & \cdot & \cdot & \cdot & \cdot \\
-1 & \cdot & \cdot & \cdot & \cdot & \cdot & \cdot & \cdot \\
\cdot & -1 & \cdot & \cdot & \cdot & \cdot & \cdot & -2 \\
\cdot & \cdot & \cdot & \cdot & -1 & -2 & \cdot & \cdot
\end{pmatrix}
\tag{35}
$$

Note that $\mathbf{F}$ characterizes the physics of the whole traffic network because it relates the defined OD-pair flows with all the 38 possible oriented traffic link flows:

$$(v_1, \cdots, v_{38})^\top = \mathbf{F} \cdot (t_{1\text{-}2}, t_{1\text{-}3}, t_{2\text{-}1}, t_{2\text{-}4}, t_{3\text{-}1}, t_{3\text{-}4}, t_{4\text{-}2}, t_{4\text{-}3})^\top \tag{36}$$

A question arises when we want to know if a given sensor network allows to estimate the state of the traffic system or where sensors should be placed in order to complete an observable sensed system. Two cases are going to be taken into account concerning these issues.

7.1.1 Case 1: Observable Configuration

Consider a sensor network consisting of 8 traffic flow meters that result in a measured variable vector $\mathbf{z}$ whose magnitudes might be estimated by means of a submatrix of $\mathbf{F}$ and the system state variables $\mathbf{x}$, that is, OD-pair traffic

flows, as follows:

$$\underbrace{\begin{pmatrix} v_2 \\ v_4 \\ v_5 \\ v_7 \\ v_{12} \\ v_{15} \\ v_{27} \\ v_{38} \end{pmatrix}}_{\substack{\mathbf{z} \\ 8\times 1}} = \underbrace{\begin{pmatrix} 1 & 2 & \cdot & \cdot & \cdot & \cdot & \cdot & \cdot \\ \cdot & \cdot & 5 & 4 & \cdot & \cdot & \cdot & \cdot \\ \cdot & \cdot & \cdot & \cdot & 5 & 4 & \cdot & \cdot \\ \cdot & \cdot & \cdot & \cdot & \cdot & \cdot & 4 & 4 \\ \cdot & 2 & \cdot & \cdot & \cdot & \cdot & 1 & 2 \\ \cdot & 2 & \cdot & \cdot & \cdot & \cdot & 1 & 1 \\ \cdot & \cdot & -2 & -1 & -2 & -1 & \cdot & \cdot \\ \cdot & \cdot & \cdot & \cdot & -1 & -2 & \cdot & \cdot \end{pmatrix}}_{\substack{\mathbf{M} \\ 8\times 8}} \cdot \underbrace{\begin{pmatrix} t_{1\text{-}2} \\ t_{1\text{-}3} \\ t_{2\text{-}1} \\ t_{2\text{-}4} \\ t_{3\text{-}1} \\ t_{3\text{-}4} \\ t_{4\text{-}2} \\ t_{4\text{-}3} \end{pmatrix}}_{\substack{\mathbf{x} \\ 8\times 1}} \tag{37}$$

Figure 6: Nguyen-Dupuis elementary networks

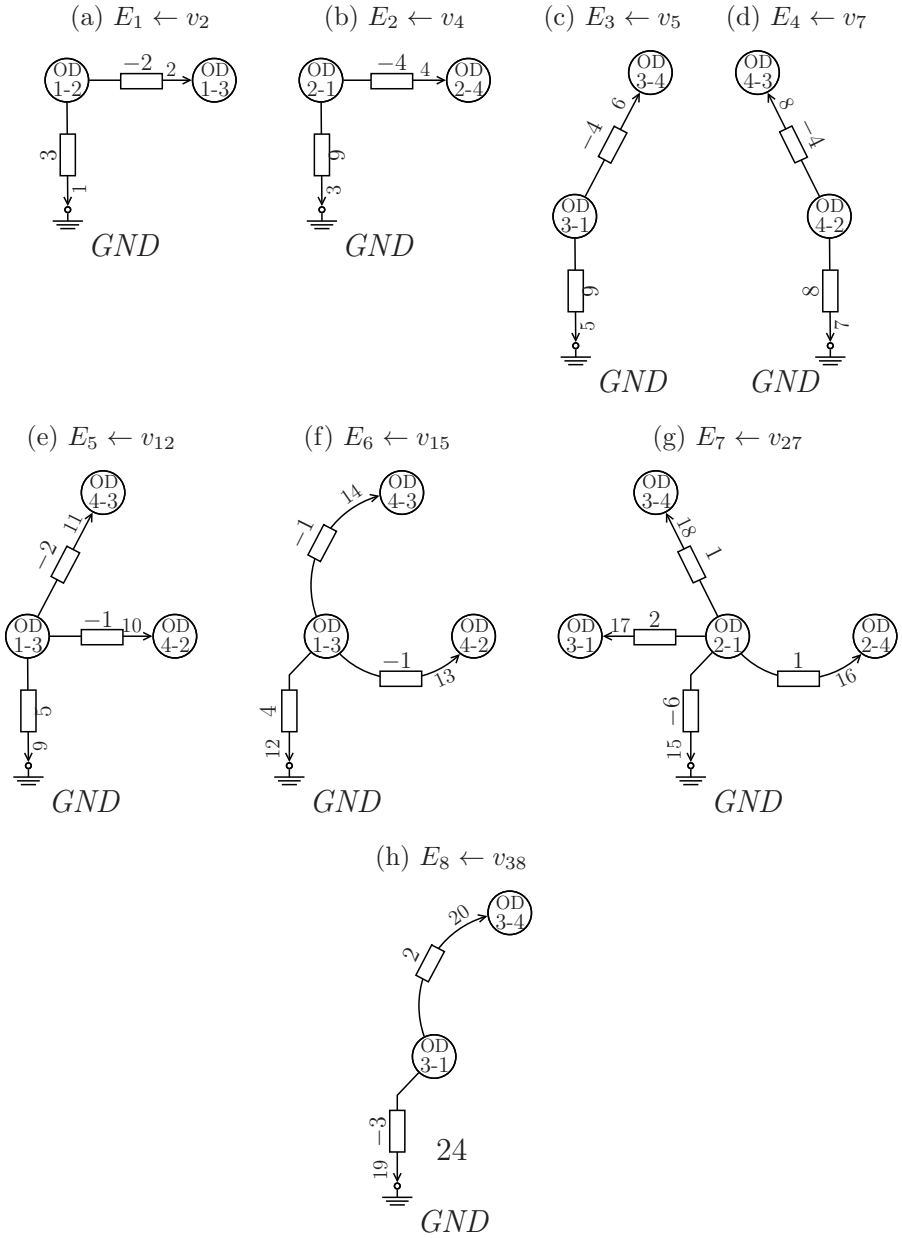

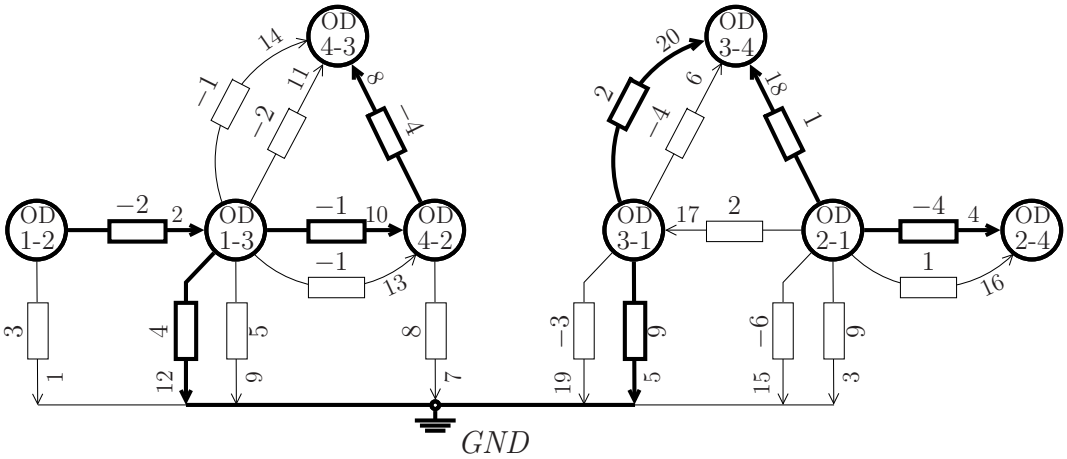

Figure 7: Nguyen-Dupuis case 1: entire associated network and measured spanning tree

The question arises as to whether OD-pair traffic flows $\mathbf{x}$ can be estimated from this sensor set $\mathbf{z}$ among the aforementioned oriented link flows.

In Figure 6 the elementary networks derived from the coefficient matrix $\mathbf{M}$ of equation (37) are shown. Note how OD-pairs play the role of network nodes while OD-pair traffic flows are the network node potential levels. In the figures, branch admittance values are indicated; indices were assigned to the branches and are shown in the figures by smaller numbers next to the arrows.

Figure 7 shows the entire associated network and how a measured spanning tree, highlighted using thick line, was found among other possibilities. Note that each elementary network is related to one and only one branch in the resulting measured spanning tree. This tree is not unique but the existence of, at least one, garantees the topological observability of the system for the sensor set defined in equation (37).

7.1.2 Case 2: Not Observable Configuration

In a second case, a total of 6 traffic flow meters are considered. The question arises as to whether system observability can be achieved by incorporating additional sensors. And if it is not possible, which is the maximum observable subsystem.

Let $\{v_2, v_4, v_5, v_7, v_{12}, v_{38}\}$ be the initial sensor set. This is a subset of the observable configuration discussed earlier. Therefore, the liear equations

that characterize this case are given by:

$$\underbrace{\begin{pmatrix} v_2 \\ v_4 \\ v_5 \\ v_7 \\ v_{12} \\ v_{38} \end{pmatrix}}_{\substack{\mathbf{z} \\ 6\times 1}} = \underbrace{\begin{pmatrix} 1 & 2 & \cdot & \cdot & \cdot & \cdot & \cdot & \cdot \\ \cdot & \cdot & 5 & 4 & \cdot & \cdot & \cdot & \cdot \\ \cdot & \cdot & \cdot & \cdot & 5 & 4 & \cdot & \cdot \\ \cdot & \cdot & \cdot & \cdot & \cdot & \cdot & 4 & 4 \\ \cdot & 2 & \cdot & \cdot & \cdot & \cdot & 1 & 2 \\ \cdot & \cdot & \cdot & \cdot & -1 & -2 & \cdot & \cdot \end{pmatrix}}_{\substack{\mathbf{M} \\ 6\times 8}} \cdot \underbrace{\begin{pmatrix} t_{1\text{-}2} \\ t_{1\text{-}3} \\ t_{2\text{-}1} \\ t_{2\text{-}4} \\ t_{3\text{-}1} \\ t_{3\text{-}4} \\ t_{4\text{-}2} \\ t_{4\text{-}3} \end{pmatrix}}_{\substack{\mathbf{x} \\ 8\times 1}} \tag{38}$$

Figure 8 shows the resulting associated network, X, and one of the possible maximum measured graphs, G (thick lines). Note that OD-pairs 2-4 and 4-3 are clearly not observable, that is, their traffic flows cannot be estimated by means of the available measurements. A more detailed analysis leads to the conclusion that measurements v_4, v_7 and v_{12} are not wholly contained in G and, therefore, their associated elementary networks E_2, E_4 and E_5, respectively, should be removed from the network in order to search for the maximum observable subnetwork. This argument should be repeated until the resulting subnetwork is made up exclusively of elementary networks associated to wholly contained measurements. That is the case after removing E_1, the elementary network associated to measure v_2. From there, the maximum observable traffic subsystem is immediate and is given by OD-pairs 3-1 and 3-4 and oriented traffic link flow sensed values $\{v_5, v_{38}\}$.

To achieve a totally observable system it is necessary to add two new traffic flow meters that allow to join the maximum measured graph in figure 8 and the isolated nodes given by OD-pairs 2-4 and 4-3. Each row in matrix $\mathbf{F}$ of equation (35) corresponds to an oriented traffic link flow and, in particular, those rows with nonzero coefficients in columns related to isolated OD-pairs are plausible candidates to improve the system observability. Thus, the inclusion of one of the sensed values from

$$\{v_3, v_{10}, v_{13}, v_{17}, v_{21}, v_{23}, v_{24}, v_{27}, v_{28}, v_{32}, v_{33}\}$$

that allow joining the OD-pair 2-4 node, in conjunction with one of the following

$$\{v_8, v_{11}, v_{14}, v_{15}, v_{19}, v_{25}, v_{26}, v_{29}, v_{31}, v_{37}\}$$

that allow joining OD-pair 4-3 node, would permit observing the whole traffic system.

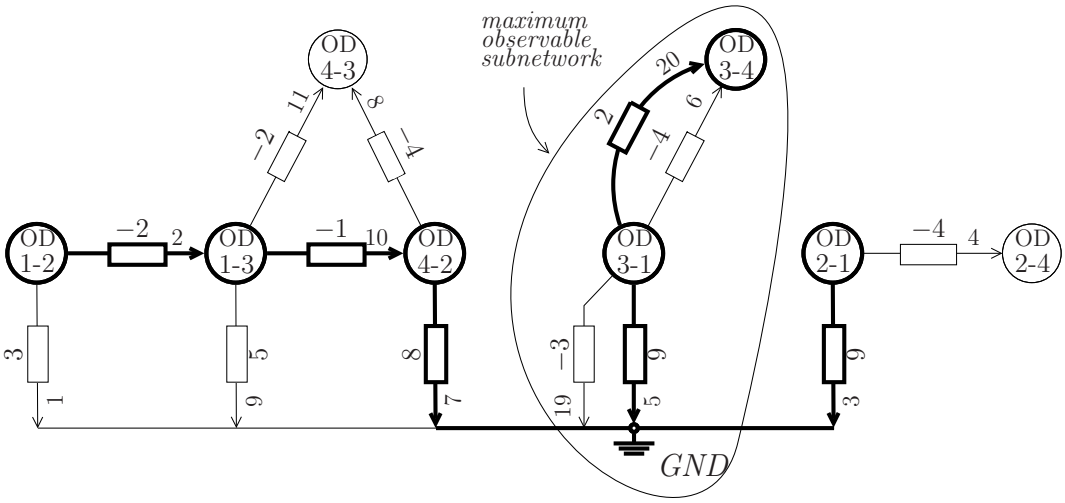

Figure 8: Nguyen-Dupuis case 2: associated network, maximum measured graph and maximum observable subnetwork

7.2 Electric Power System Example

As it was mentioned in the introduction, observability analysis in electric power systems has been an important research topic for decades. In particular, this issue can be addressed by means of topological methods when the set of measured variables are made up exclusively of bus voltages and active and reactive powers that are injected into or flow through the system [9]. In those cases the system can be considered as a *decoupled* system [7], that is, a pair of two independent subsystems; one of which can be analyzed by means of active power measurements, and is known as P-δ subsystem; the other one, the Q-U subsystem, can be studied exclusively from bus voltages and reactive powers measured in the system. Only the Q-U subsystem is going to be analyzed in this example. Such a subsystem is observable [7] when a sufficient number of well placed reactive powers are measured and, at least, one node voltage is known at any node.

An electric power system is commonly represented as a mesh where the edges denotes the lines in charge of transporting the electric energy and where the nodes are the places where the lines are incident, that is, the places where electricity is generated, consumed or transformed. Figure 9a shows the topology of an example of an electric power system with 8 nodes. The places where reactive powers are acquired in the system are shown in figure 9b, where two kinds of measurements may be distinguished:

- *Node measurements*, numbered as 1, 2 and 3 in figure 9b, corresponding to reactive powers injected into the system through a node. These

Figure 9: Electric power system example

(a) System topology

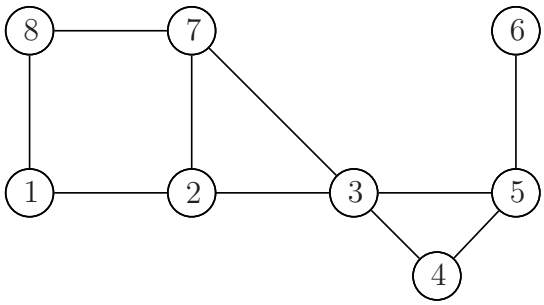

(b) Measurement configuration

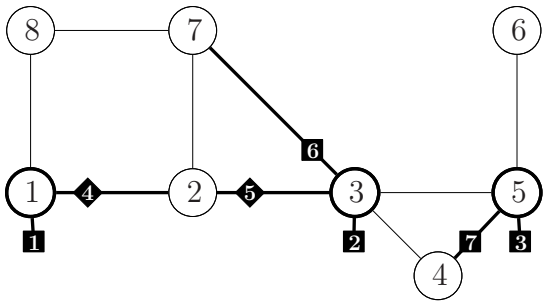

(c) Associated network

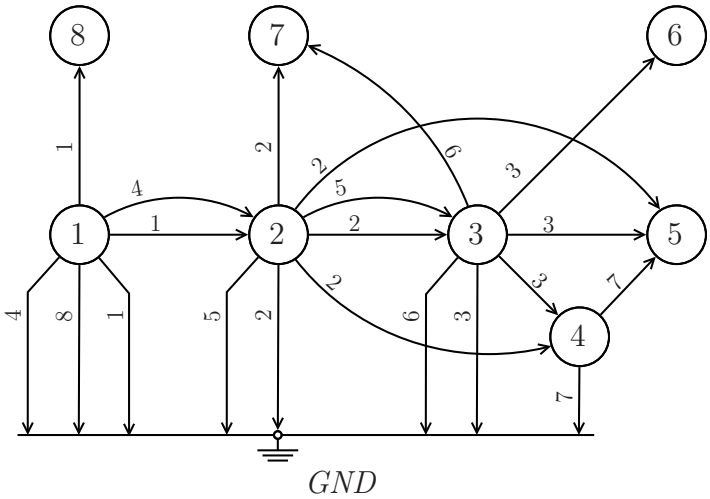

(d) Simplified associated network

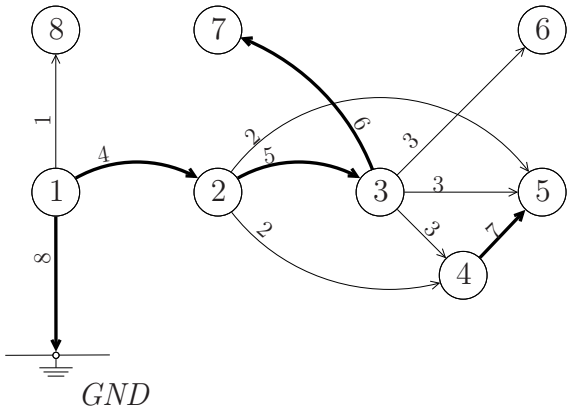

(e) Measured spanning tree

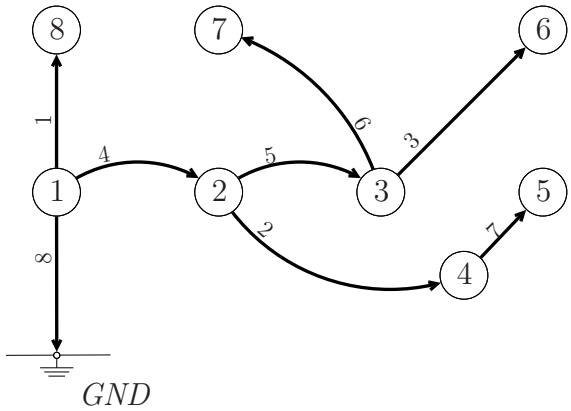

derive in equations of the form:

$$\begin{aligned} z_1 &= Q_1 - c_1 = \alpha_{11}U_1 + \alpha_{12}U_2 + \alpha_{18}U_8 \\ z_2 &= Q_3 - c_2 = \alpha_{22}U_2 + \alpha_{23}U_3 + \alpha_{24}U_4 + \alpha_{25}U_5 + \alpha_{27}U_7 \\ z_3 &= Q_5 - c_3 = \alpha_{33}U_3 + \alpha_{34}U_4 + \alpha_{35}U_5 + \alpha_{36}U_6 \end{aligned} \tag{39}$$

where Q_i denotes the i-th node reactive power, U_i represents the voltage at node i, α_{ki} is a coefficient related to measurement k and node i and c_k denotes a constant term related to measurement k.

- *Branch measurements*, numbered as 4, 5, 6 and 7 in figure 9b, corresponding to reactive powers that flow through the lines. These derive in equations of the form:

$$\begin{aligned} z_4 &= Q_{12} - c_4 = \alpha_{41}U_1 + \alpha_{42}U_2 \\ z_5 &= Q_{23} - c_5 = \alpha_{52}U_2 + \alpha_{53}U_3 \\ z_6 &= Q_{37} - c_6 = \alpha_{63}U_3 + \alpha_{67}U_7 \\ z_7 &= Q_{45} - c_7 = \alpha_{74}U_4 + \alpha_{75}U_5 \end{aligned} \tag{40}$$

  where Q_{ij} denotes a branch reactive power that is acquired in a line that joins nodes i and j.

Finally, a voltage measure at node 1 is also considered, resulting in an equation as follows:

$$z_8 = U_1 \tag{41}$$

Summarizing, the linear equations that characterize the Q-U subsystem and the given measurement configuration are as follows:

$$\underbrace{\begin{pmatrix} Q_1 - c_1 \\ Q_3 - c_2 \\ Q_5 - c_3 \\ Q_{12} - c_4 \\ Q_{23} - c_5 \\ Q_{37} - c_6 \\ Q_{45} - c_7 \\ U_1 \end{pmatrix}}_{\substack{\mathbf{z} \\ 8\times 1}} = \underbrace{\begin{pmatrix} \alpha_{11} & \alpha_{12} & \cdot & \cdot & \cdot & \cdot & \cdot & \alpha_{18} \\ \cdot & \alpha_{22} & \alpha_{23} & \alpha_{24} & \alpha_{25} & \cdot & \alpha_{27} & \cdot \\ \cdot & \cdot & \alpha_{33} & \alpha_{34} & \alpha_{35} & \alpha_{36} & \cdot & \cdot \\ \alpha_{41} & \alpha_{42} & \cdot & \cdot & \cdot & \cdot & \cdot & \cdot \\ \cdot & \alpha_{52} & \alpha_{53} & \cdot & \cdot & \cdot & \cdot & \cdot \\ \cdot & \cdot & \alpha_{63} & \cdot & \cdot & \cdot & \alpha_{67} & \cdot \\ \cdot & \cdot & \cdot & \alpha_{74} & \alpha_{75} & \cdot & \cdot & \cdot \\ 1 & \cdot & \cdot & \cdot & \cdot & \cdot & \cdot & \cdot \end{pmatrix}}_{\substack{\mathbf{M} \\ 8\times 8}} \underbrace{\begin{pmatrix} U_1 \\ U_2 \\ U_3 \\ U_4 \\ U_5 \\ U_6 \\ U_7 \\ U_8 \end{pmatrix}}_{\substack{\mathbf{x} \\ 8\times 1}} \tag{42}$$

Figure 9c shows the associated network derived from (42), where branch admittances where suppressed in order to clarify the drawing. The numbers close to the oriented edges of the graph denote the order of the measurement

from which the edge is derived, that is, the order of the elementary network in which it is defined. Note that the only branch associated to measurement z_8 and, in general, to any node voltage measure, is the one that joins the node where the voltage is acquired and the reference node. As a result, the reference node is implicitly connected to the rest of the nodes due to the inclusion of just one node voltage measurement and a simplified associated network may be taken into account as shown in figure 9d, where thicker lines represent the edges that are present in the entire individuals of the search space of measured graphs. Note that those edges are the ones due to the node voltage and branch reactive power measurements.

Finally, one of the possible measured spanning trees is shown in figure 9e, after the assignment of each of the eight measurements considered to one of the edges in the associated network. The existence of such a tree permits concluding that the electric power Q-U subsystem is topologically observable for the given sensing system.

8 Conclusions

In this paper a new topological approach to the determination of the observability of a physical system where a sensor network is defined has been presented. The techniques developed in this paper were inspired by the contributions of researchers in the scope of electric power systems and generalized to other physical sparse linear systems. The terms parametric unobservability and topological observability have been introduced and justified in a formal way, which allows characterizing those parameter dependent cases where an algebraic approach to the observability issue led to different results than the topological one. A sensing system has been considered for any linear physical system or, at least, linearized after a first order derivative. From there, an associated network has been defined and it has been demonstrated that the existence of certain constrained graphs, known as measured graphs, in the scope of the associated network permits characterizing the topological observability of the system. From this graph approach the determination of the maximum observable subsystem can be carried out in case of unobservability. The technique has been illustrated with the help of two examples in the scope of traffic sensing structures and electric power systems.

Acknowledgements

This work was partially funded by the Xunta de Galicia, the MICINN of Spain and European Regional Development Funds through projects 09DPI012166PR, 10DPI005CT and TIN2011-28753-C02-01.

References

[1] R. E. Kalman. Mathematical Description of Linear Dynamical Systems. *SIAM Journal on Control*, 1:152–192, 1963.

[2] Ji Li, Lachlan L.H. Andrew, Chuan Heng Foh, Moshe Zukerman, and Hsiao-Hwa Chen. Connectivity, coverage and placement in wireless sensor networks. *Sensors*, 9(10):7664–7693, 2009.

[3] Ching-Tai Lin. Structural controllability. *Automatic Control, IEEE Transactions on*, 19(3):201 – 208, jun 1974.

[4] Jean-Michel Dion, Christian Commault, and Jacob van der Woude. Generic properties and control of linear structured systems: a survey. *Automatica*, 39(7):1125 – 1144, 2003.

[5] T. Boukhobza, F. Hamelin, and S. Martinez-Martinez. State and input observability for structured linear systems: A graph-theoretic approach. *Automatica*, 43(7):1204 – 1210, 2007.

[6] T. Boukhobza and F. Hamelin. Observability analysis for structured bilinear systems: A graph-theoretic approach. *Automatica*, 43(11):1968 – 1974, 2007.

[7] F.C. Schweppe and a.l. Power system static-state estimation, parts i,ii and iii. *Power Apparatus and Systems, IEEE Transactions on*, PAS-89(1):120 –135, jan. 1970.

[8] A. Monticelli and F.F. Wu. Network observability: Theory. *Power Apparatus and Systems, IEEE Transactions on*, PAS-104(5):1042 –1048, may 1985.

[9] G.R. Krumpholz, K.A. Clements, and P.W. Davis. Power system observability: A practical algorithm using network topology. *Power Apparatus and Systems, IEEE Transactions on*, PAS-99(4):1534 –1542, july 1980.

[10] E. Castillo, P. Jimenez, J.M. Menendez, and A.J. Conejo. The observability problem in traffic models: Algebraic and topological methods. *Intelligent Transportation Systems, IEEE Transactions on*, 9(2):275 – 287, june 2008.

[11] Vladimír Veverka and F. Madron. *Material and energy balancing in the process industries: from microscopic balances to large plants*. Computer-aided chemical engineering. Elsevier Science B.V., 1997.

[12] V.H. Quintana, A. Simoes-Costa, and A. Mandel. Power system topological observability using a direct graph-theoretic approach. *Power Apparatus and Systems, IEEE Transactions on*, PAS-101(3):617 –626, march 1982.

[13] R.R. Nucera and M.L. Gilles. Observability analysis: a new topological algorithm. *Power Systems, IEEE Transactions on*, 6(2):466 –475, may 1991.

[14] G. N. Korres and P. J. Katsikas. A hybrid method for observability analysis using a reduced network graph theory. *Power Systems, IEEE Transactions on*, 18(1):295–304, feb 2003.

[15] S. Vazquez-Rodriguez, A. Faina, and B. Neira-Duenas. An evolutionary technique with fast convergence for power system topological observability analysis. In *Evolutionary Computation, 2006. CEC 2006. IEEE Congress on*, pages 3086–3090, 2006.

[16] J.R. Rice. *Matrix computations and mathematical software*. McGraw-Hill computer science series. McGraw-Hill, 1983.

[17] Hyoung Joong Kim, Kyung Choi, H.B. Lee, H.K. Jung, and S.Y. Hahn. A new algorithm for solving ill conditioned linear systems. *Magnetics, IEEE Transactions on*, 32(3):1373–1376, may 1996.

[18] S K Kurtzl. A direct algorithm for solving ill-conditioned linear algebraic systems. *Advances*, 42(C):629–633, 2000.

[19] M. Cosnard and L. Grigori. Using postordering and static symbolic factorization for parallel sparse lu. In *Parallel and Distributed Processing Symposium, 2000. IPDPS 2000. Proceedings. 14th International*, pages 807–812, 2000.

[20] W.F. Tinney, V. Brandwajn, and S.M. Chan. Sparse vector methods. *Power Apparatus and Systems, IEEE Transactions on*, PAS-104(2):295 –301, feb. 1985.

[21] James R. Bunch and Donald J. Rose. Partitioning, tearing and modification of sparse linear systems. *Journal of Mathematical Analysis and Applications*, 48(2):574 – 593, 1974.

[22] K.A. Clements, G.R. Krumpholz, and P.W. Davis. Power system state estimation with measurement deficiency: An algorithm that determines the maximal observable subnetwork. *Power Apparatus and Systems, IEEE Transactions on*, PAS-101(9):3044 –3052, sept. 1982.

[23] Sang Nguyen and Clermont Dupuis. An efficient method for computing traffic equilibria in networks with asymmetric transportation costs. *Transportation Science*, 18(2):185–202, 1984.